This document and the data disclosed herein or herewith is not to be reproduced, used, or disclosed in whole or in part to anyone without the written permission of THAT Corporation.

Rev	Description	Date	Approved

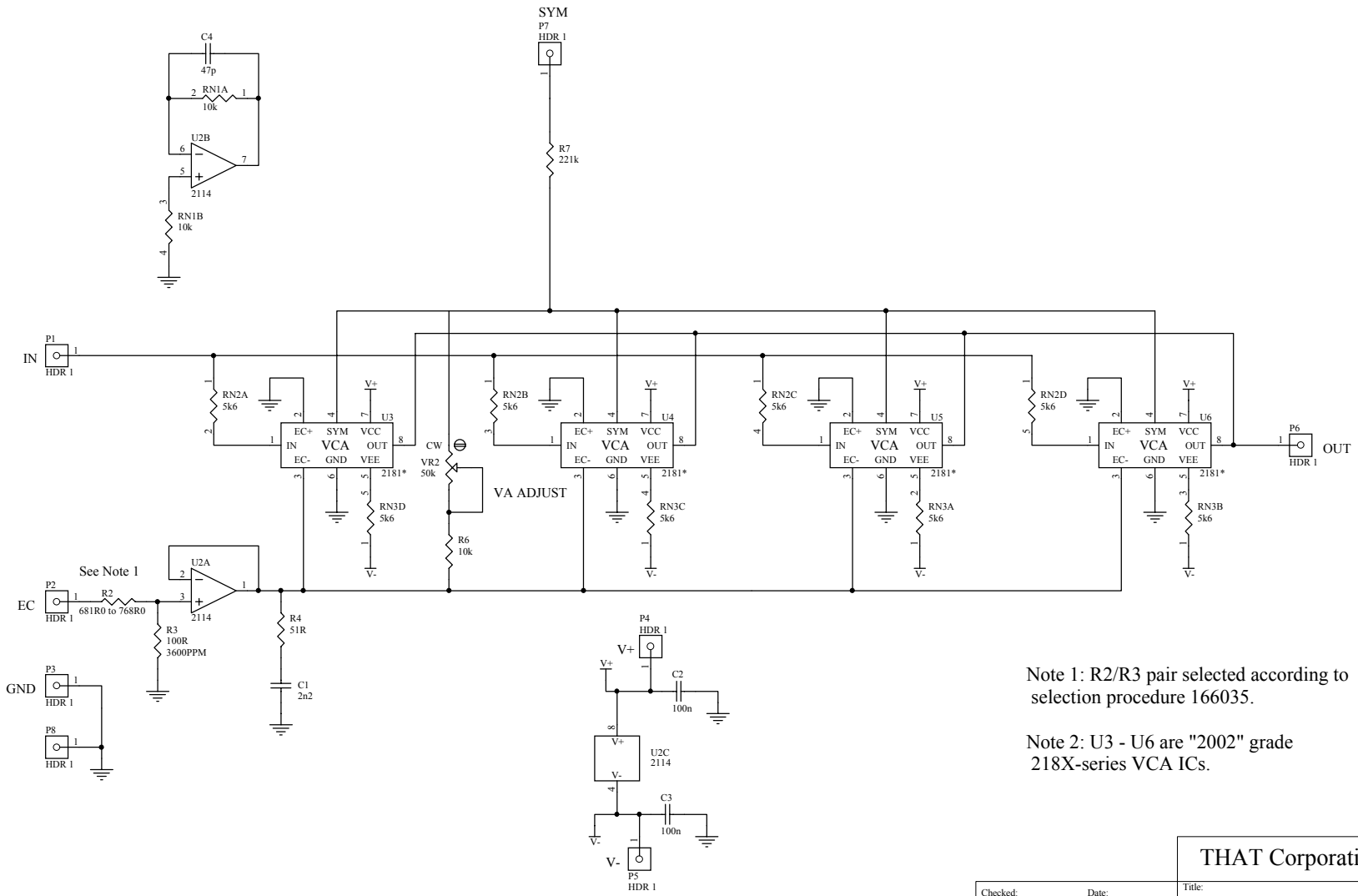

Note 1: R2/R3 pair selected according to selection procedure 166035.

Note 2: U3 - U6 are "2002" grade 218X-series VCA ICs.

THAT Corporation
734 Forest Street
Marlborough, MA
508-229-2500

Checked:	Date:	Title: 2002T External Trim Modular VCA	
Proj. Eng.:	Date:		
Chf. Eng.:	Date:	Size: B	Drawing Number: 330361	Revision: 00
Production:	Date:	Date: 12-Jan-2001	Drawn by: gkh	Sheet 2 of 2
		File: P:\DATA\THAT\2002\SCH\361-0200.SCH		