THOMSON-CSF

NPC®

ELECTRONICS

POWER OPERATIONAL AMPLIFIER

ESM 432 C, ESM 532 C, ESM 632 C, ESM 732 C

General Description:

The ESM 432 C, 532 C, 632 C and 732 C are power operational amplifiers, specially intended for use as:

- audio high fidelity amplifiers
- servo motor amplifiers
- vertical deflection circuits
- programmable high current source/sink

They are supplied in a power in-line package featuring very low thermal resistance. The junction temperature is limited at 140°C by an internal protection circuit.

Pin Configuration:

Case

Power in-line package Front View

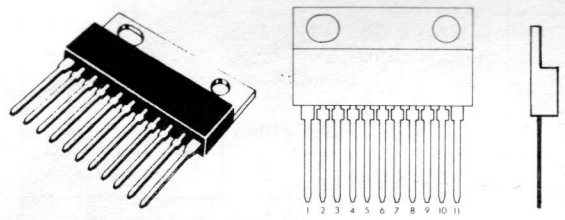

1	Substrate	7	Bootstrap
2	Input +	8	$+V_{CC}$
3	Input −	9	Output
4	Freq. Compensation	10	$-V_{CC}$
5	Do not use	11	Substrate
6	Do not use		

Internal Diagram

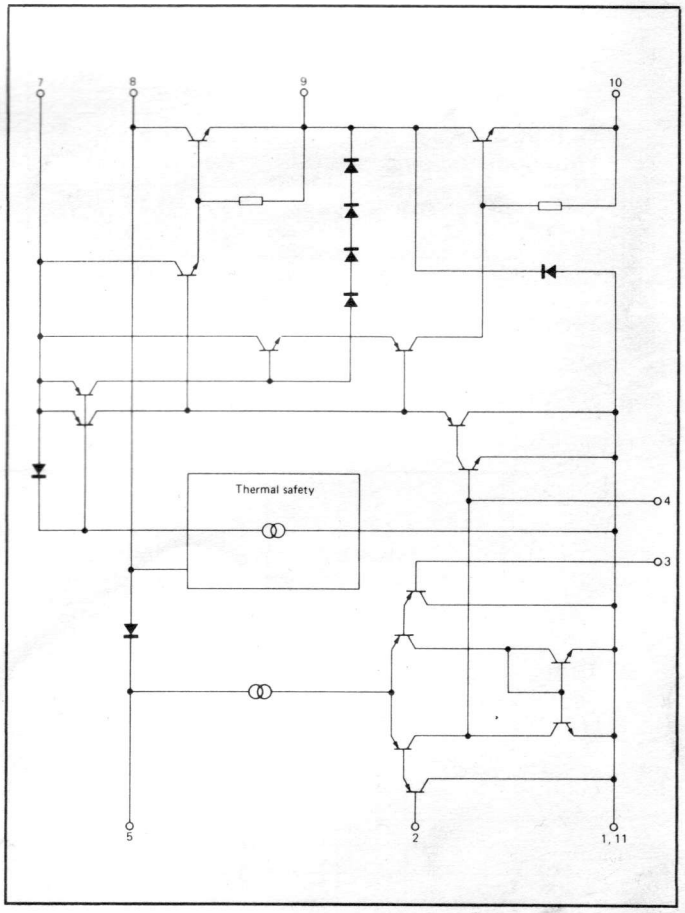

NUCLEONIC PRODUCTS COMPANY

6660 VARIEL AVENUE / CANOGA PARK, CALIFORNIA 91303 / TELEPHONE (213) 887-1010 / TWX 910-494-1954 / TELEX 69-8481

ESM 432 C, ESM 532 C, ESM 632 C, ESM 732 C

Absolute Ratings (Limiting Values) $T_{amb} = 25^{o}$ (Unless Otherwise Stated)

Supply Voltage		V_{CC}	ESM 432 ESM 532 ESM 632 ESM 732	30 32 26 18	V V V V
Junction temperature (1)	max.	T_j		150	^{o}C
Storage temperature	min. max.	T_{stg}		−25 +150	^{o}C
Peak current in collector-substrate diode (d=0.5 mS)	11 9			3.5	A

(1) This limit value is automatically achieved by internal protection.

General Characteristics: $T_{amb} = 25^{o}C$ (Unless Otherwise Stated)

Parameter	Conditions		Min.	Typ.	Max.	Units
Input offset voltage	$V_{CC} = 28V$			2	6	mV
Input bias current	$V_{CC} = 28V$			200	400	nA
Input offset current	$V_{CC} = 28V$			50	200	nA
Open loop voltage gain	$V_{CC} = 28V$			80	86	dB
Input noise voltage	R_G=10kΩ BW=20kHz			4		μV
Supply rejection ratio	$V_{CC} = 28V$			60	80	dB
Input voltage range	Negative Positive		$-V_{CC}$ $+V_{CC} -4V$			V V
Output voltage swing With bootstrapping	Negative Positive		$-V_{CC} + 2V$ $+V_{CC} - 2V$	$-V_{CC}+1.5$ $+V_{CC}-1.5$		V V
Quiescent current	$V_{CC} = 14V$ $V_{CC} = 28V$			20 25		mA mA
Slew rate	$V_{CC} = 28V$			1		V/μSec
Peak output current	Internally limited			±3.5		A
S.O.A.R. each output transistor	$V_{CC} = 12V$ $V_{CC} = 15V$ $V_{CC} = 20V$ $V_{CC} = 25V$				3.5 2.0 .8 .4	A A A A
Output power (output sine wave)	$V_{CC} = 28V$ $R_L = 4\Omega$ d = 1% f = 1 kHz	ESM 432 ESM 532	15	20		W
	$V_{CC} = 30V$ $R_L = 8\Omega$ d = 1% f = 1 kHz	ESM 532		10		W
	$V_{CC} = 24V$ $R_L = 4\Omega$ d = 1% f = 1 kHz	ESM 632		14		W
	$V_{CC} = 14V$ $R_L = 2\Omega$ d = 1% f = 1 kHz	ESM 732		8		W

Thermal Characteristics:

		Typ.	Max.	Units
Junction-ambient thermal resistance	$R_{th\ (j\text{-}a)}$	45		°C/W
Junction-case thermal resistance	$R_{th\ (j\text{-}c)}$	2	3	°C/W

Maximum Power Dissipation:

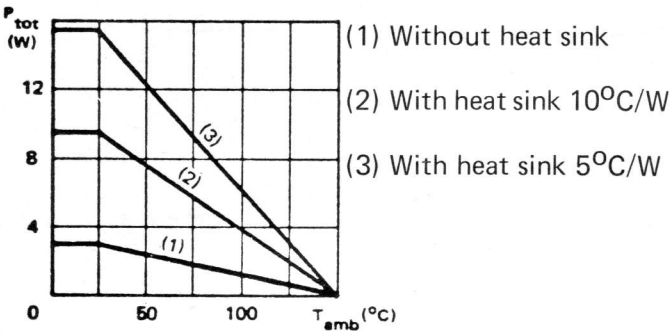

Typical Thermal Protection Characteristics:

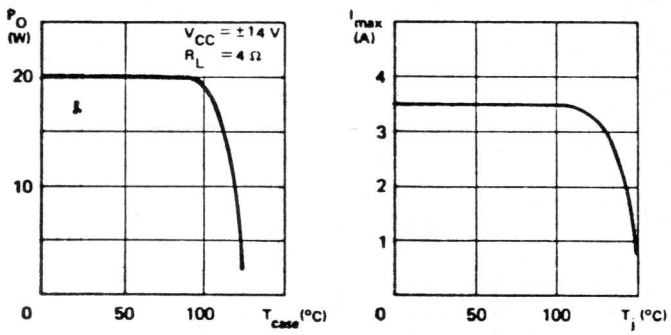

Operating Area:

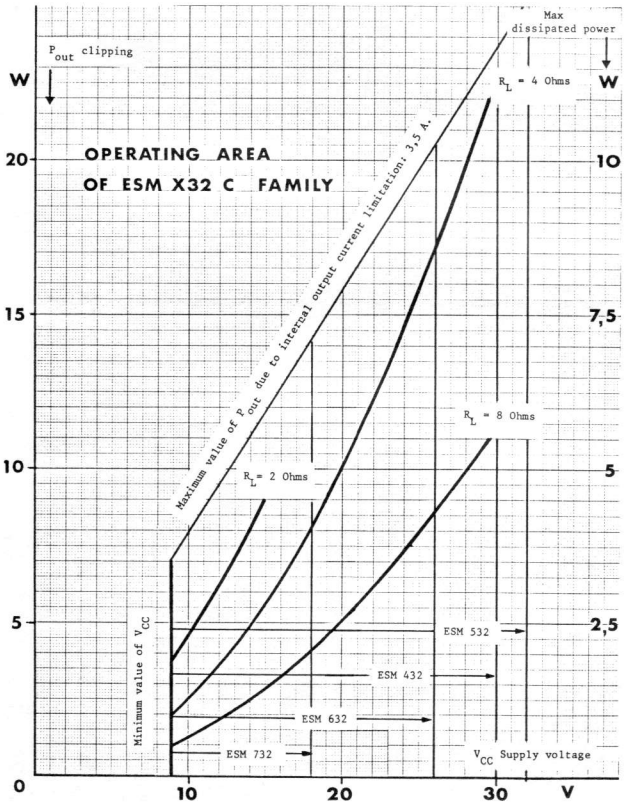

Total Harmonic Distorsion Versus Frequency.

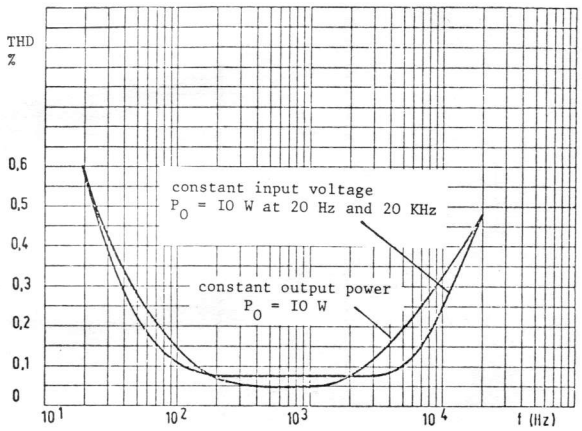

ESM 532 C/ 432 C
V_{CC} = 28 v or ± 14 v
R_L = 4 ohms

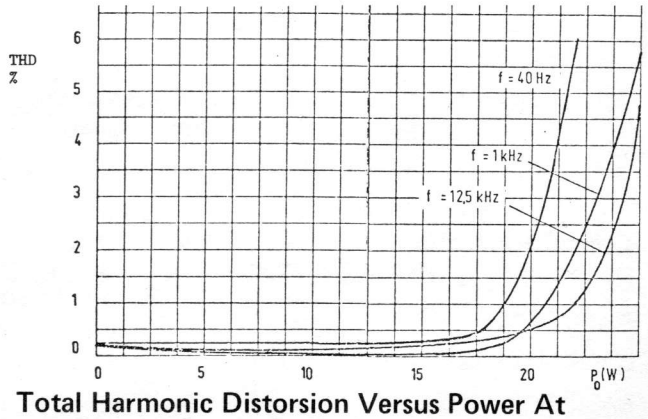

Total Harmonic Distorsion Versus Power At Different Frequencies.

Application Circuits:

Hi-Fi Audio Amplifier with split power supply

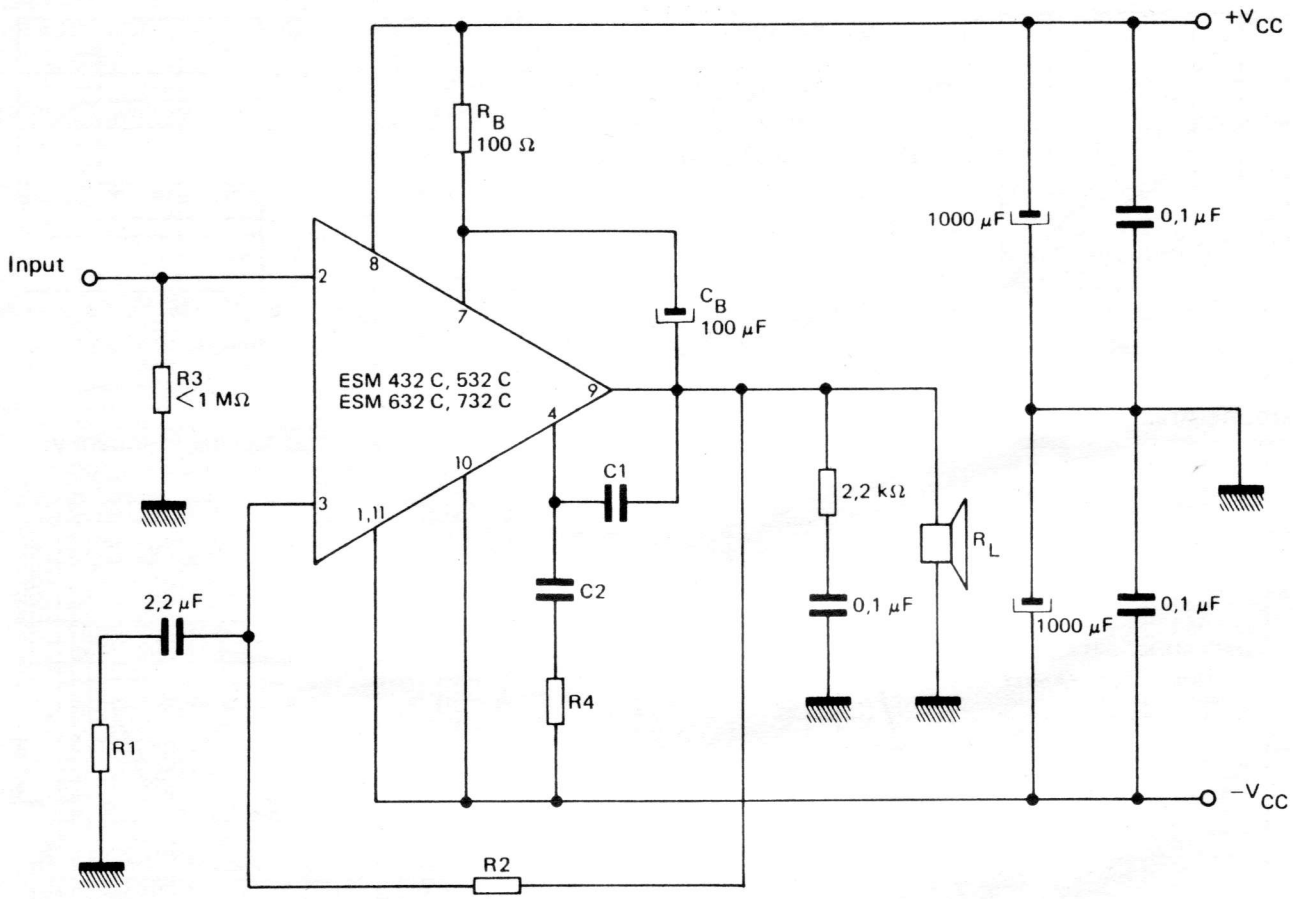

Gain $A_V = \frac{R2 + I}{R1}$

Bandwidth B = $\frac{R1}{R2} \frac{Y}{C1}$
(small signal)

Y = 2.7 10^4 S typ

Slew Rate 1 V/μs

Typical application
R_1 = 6.8kΩ , R2 = R3 = 220kΩ , C1 = 68 pF, C2 = 1 nF, R4 = 270Ω
A_V = 33
B = 40 Hz - 120 kHz

When the bootstrap circuit is not used (R_B and C_B removed, pins 7 and 8 tied to $+V_{CC}$), upper voltage loss becomes approximately 1 volt greater; consequently output power is reduced.

Application Circuits:

Hi-Fi Audio Amplifier with Single Power Supply

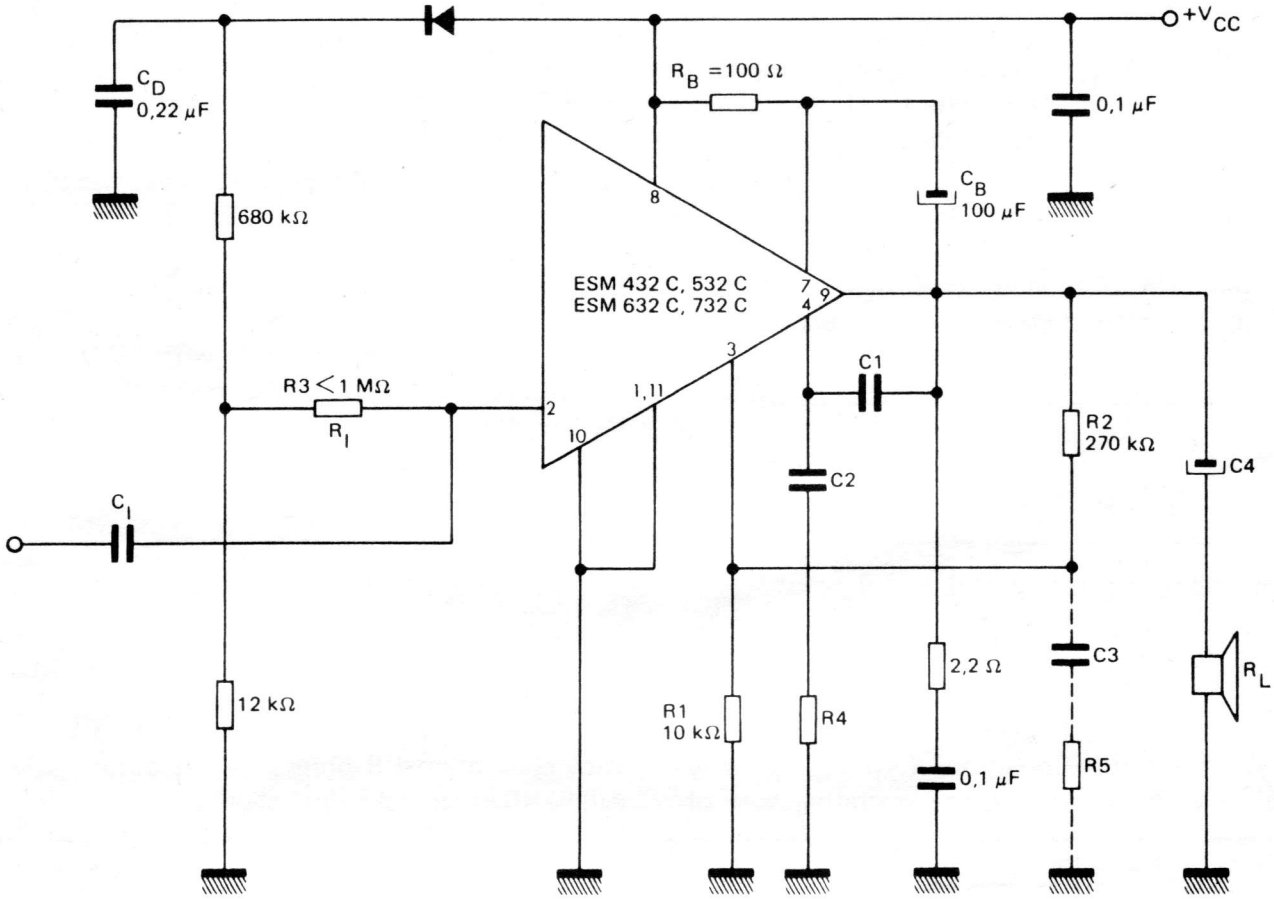

$R_L = 4$	C4 = 3300 µf with	ESM 432 C, 532 C, 632 C
$R_L = 2$	C4 = 3300 µf	ESM 732 C
$R_L = 8$	C4 = 1000 µf	ESM 532 C

The output power is the same as in previous case

Voltage gain $A_V = \frac{R2}{R1} + 1 = 28$ Bandwidth B = 12 Hz - 140 kHz

For higher voltage gain, C3 and R5 should be used. C3, R5 should be kept lower than C4, R_L and C_1, R_1 lower than 10 ms for better transient overloading protection.

-The minimum operating load resistor depends on the maximum repetitive value of output current I_M. So, it is possible to calculate the relationship between a given V_{CC} and the max value of P_O versus I_M:

$$P_O max = \frac{\alpha}{4} V_{CC} \cdot I_M \qquad (2)$$

where $\alpha = \frac{V_{pp}}{V_{CC}}$ = efficiency ratio

V_{pp} = maximum peak to peak output voltage before clipping. (depending on V_{CE} sat)

-Maximum dissipated power may also be calculated for sine wave operating conditions:

$$P_D max = \frac{1}{2\pi^2} \frac{V_{CC}^2}{R_L} = \frac{1}{\alpha^2} \frac{4}{\pi^2} P_O max \qquad (3)$$

P_D max $\cong$ 0,5 P_O max with α = 0,9

-With the three preceding formulae we may establish a diagram giving the operating area of ESM X32 C family, taking into account the basic parameters of the family:

-Max repetitive output current I_M = 3,5 A
-Efficiency ratio: 0,0
-V_{CC}min = 9V
-V_{CC}max = 18, 26, 30 or 32V, depending on type.

-With this diagram it is possible to predict very quickly the electrical performance for a given V_{CC} and R_L.

Need more power:

To get more power it is possible to use two IC in a bridge circuit (see application figure).

In that case the copper slugs remain grounded.

The maximum power available with 28 V power supply and 3,5 A max. output current is given by the following calculation:

$V_{pp} = 2\alpha \cdot V_{CC}$ $\qquad \alpha \cong 0.9$

$V_{pp} \cong 50$ V

$I_{pp} = 7$ A

$P_{out\ max.} \cong$ 44 W before clipping

with $R_L = 7,2\Omega$

With conventional 8 ohms load the output power will be 40 watts just before clipping.

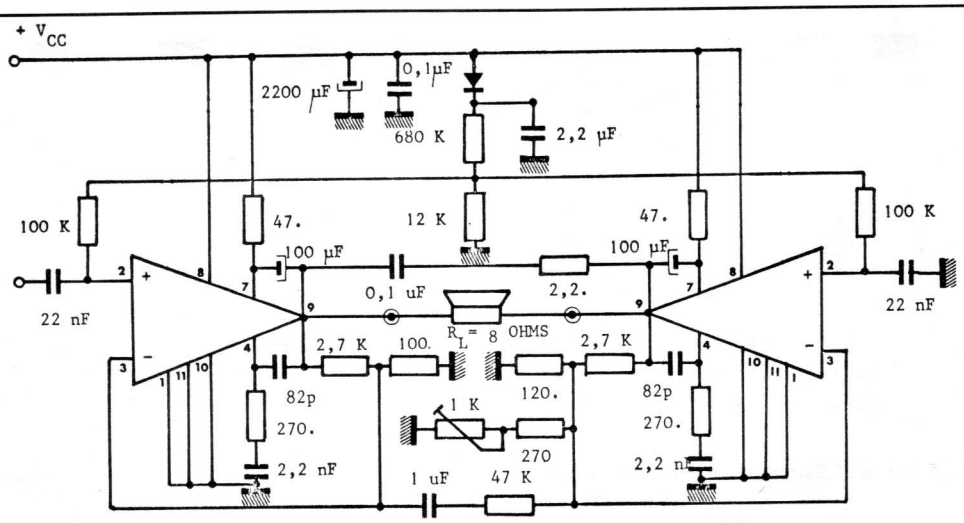

Bridged audio amplifier.

ESM 432/532 C $\begin{cases} V_{CC} = 28 \text{ v} \\ R_L = 8 \text{ ohms} \\ P_O \text{ RMS} = 40 \text{ w} \end{cases}$

Application Circuits:

AF Amplifier with tone controls

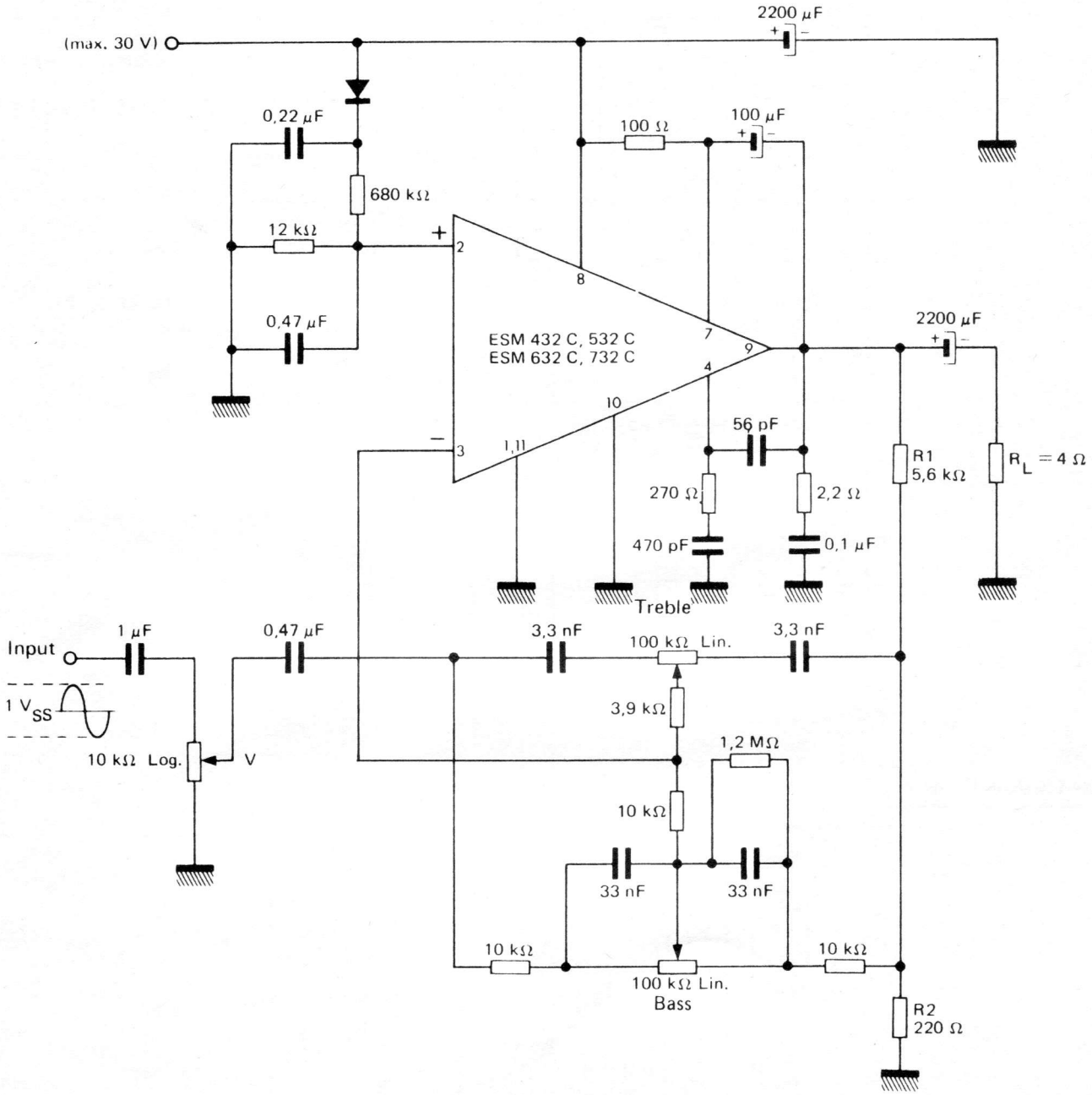

A_V (1 kHz) = 29 dB

A_V (140 Hz, 20 kHz) = 29 ± 14 dB

Application Circuits:

TV vertical sweep (single voltage supply)

Tube 20 AX or ou PIL 110° · I_{pp} – 3,8 A (min.)

C = C correction pot (positive or negative)

A = Amplitude setting

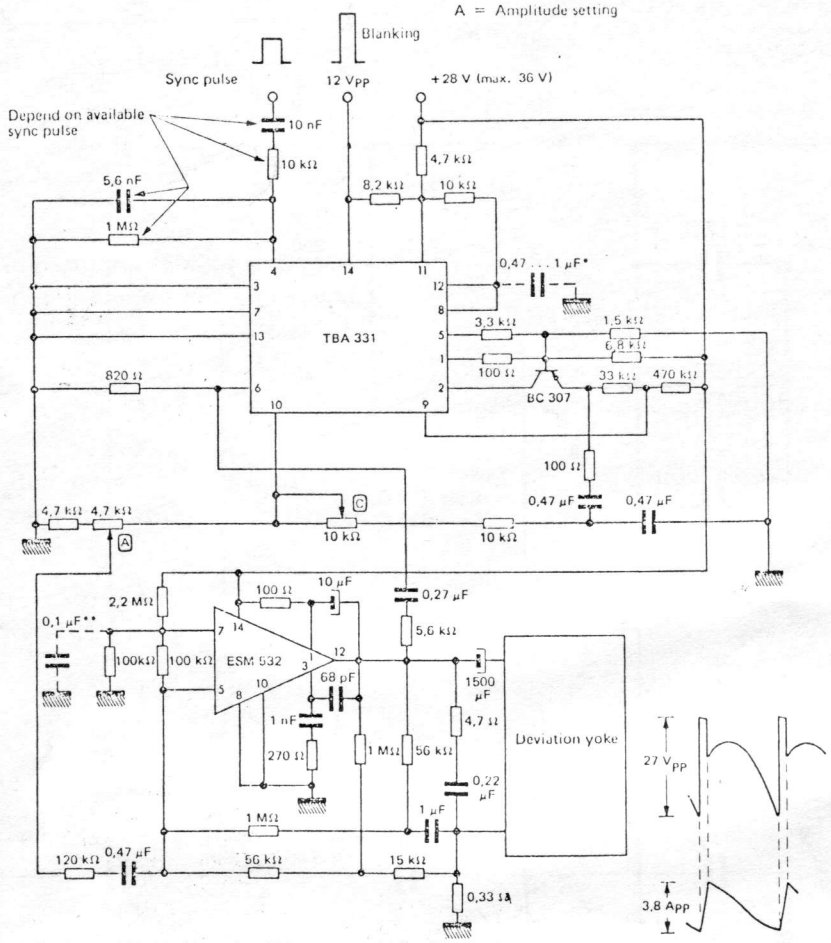

* Provides variable blanking pulse width

** For PIL tube only

Case Outline Drawing:

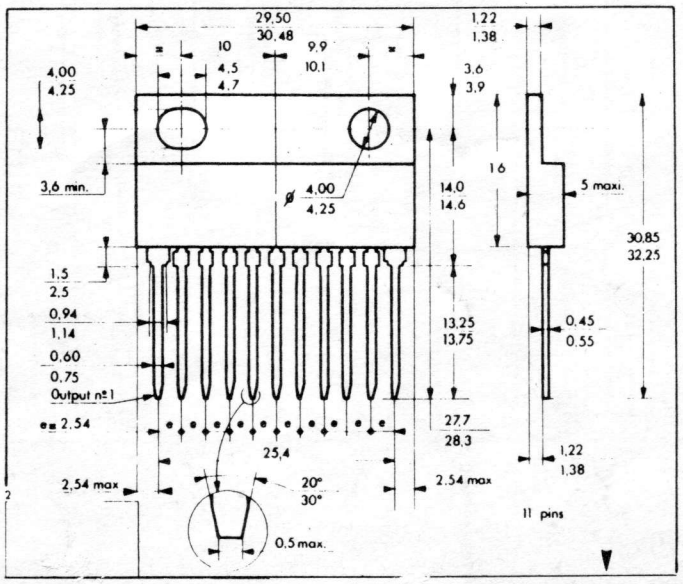

(Dimensions in mm)